DATA SHEET

Ball Valve Stem Extension

The Right Connection®

The Dixon® ball valve stem extension is used when you need distance from insulated lines or need to dissipate heat or cold in your process between the valve and the handle or actuator.

Ball Valve Stem Extension Data

Size	Extension Length	ISO5211	Part Number
1/2” - 3/4”	4”	F04	BV-2X-SE5075-4
1”	4”	F05	BV-2X-SE10-4
1-1/2” - 2”	4”	F07	BV-2X-SE1520-4
2-1/2” - 3”	4”	F10	BV-2X-SE2530-4
4”	4”	F12	BV-2X-SE40-4

Ball Valve Stem Extension
Dimensions

The Right Connection®

BV2C-Series Ball Valve

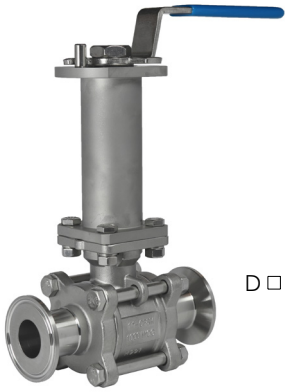

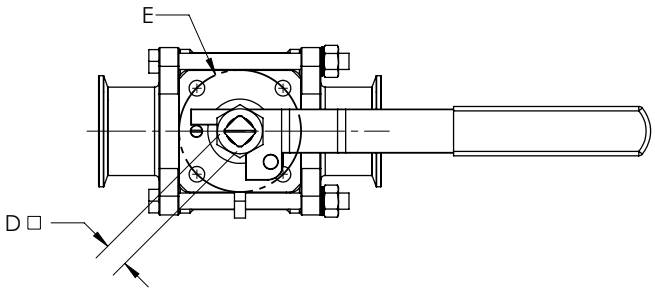

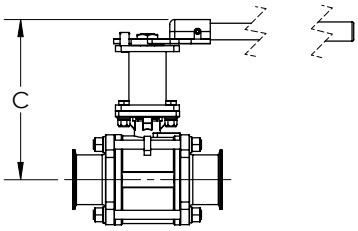

SIZES 2.5" - 4" ONLY
NTS

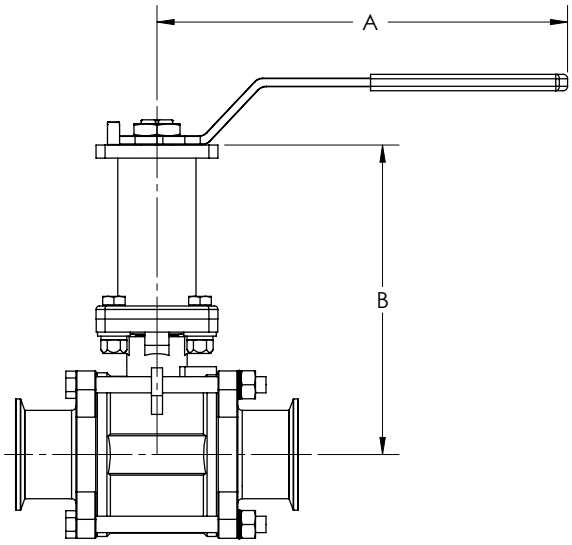

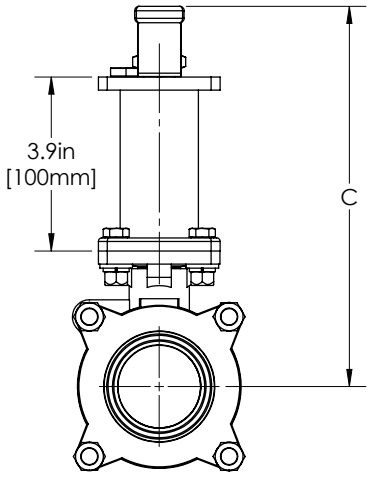

Size	A	B	C +/- .400”	D	E
1/2	4.9”	5.5”	7.0”	-	F04
	124 mm	139 mm	178 mm	9 mm	F04
3/4	4.9”	5.7”	7.3”	-	F04
	124 mm	145 mm	185 mm	9 mm	F04
1	5.4”	6.0”	7.5”	-	F05
	137 mm	153 mm	190 mm	11 mm	F05
1-1/2	9.3”	6.7”	8.3”	-	F07
	236 mm	169 mm	210 mm	14 mm	F07
2	9.3”	7.0”	8.7”	-	F07
	236 mm	178 mm	220 mm	14 mm	F07
2-1/2	18.0”	7.8”	9.2”	-	F10
	457 mm	198 mm	234 mm	17 mm	F10
3	18.3”	8.1”	9.7”	-	F10
	465 mm	205 mm	247 mm	17 mm	F10
4	18.3”	9.3”	10.9”	-	F12
	465 mm	235 mm	276 mm	22 mm	F12

© 2023 DVCC • DSBVSE_1123

Ball Valve Stem Extension
Dimensions

The Right Connection®

BV2I-Series Ball Valve

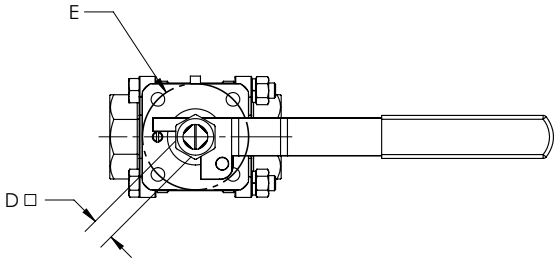

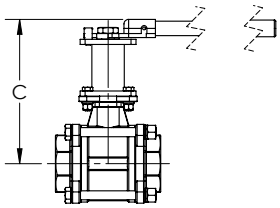

SIZES 2.5" - 4" ONLY
NTS

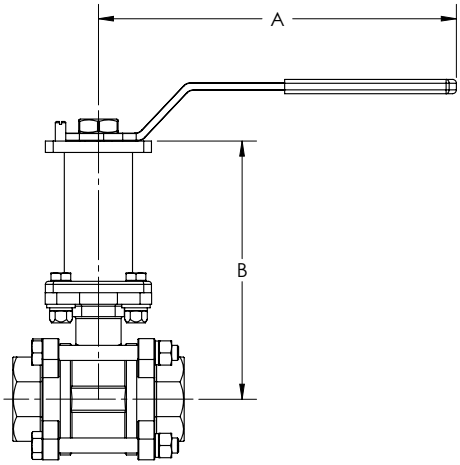

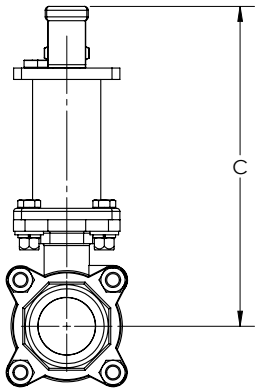

Size	A	B	C +/- .400”	D	E
1/4	4.72”	5.46”	7.00”	-	F04
	119.9 mm	138.8 mm	177.7 mm	9 mm	F04
3/8	4.72”	5.49”	7.02”	-	F04
	119.9 mm	139.3 mm	178.3 mm	9 mm	F04
1/2	4.72”	5.64”	7.18”	-	F04
	119.9 mm	143.4 mm	182.3 mm	9 mm	F04
3/4	4.72”	5.86”	7.40”	-	F04
	119.9 mm	149.0 mm	187.9 mm	9 mm	F04
1	5.35”	6.13”	7.56”	-	F05
	135.9 mm	155.6 mm	192.1 mm	11 mm	F05
1-1/4	5.35”	6.31”	7.74”	-	F05
	135.9 mm	160.1 mm	196.6 mm	11 mm	F05
1-1/2	9.17”	6.70”	8.30”	-	F07
	232.9 mm	170.3 mm	210.9 mm	14 mm	F07
2	9.17”	7.34”	8.94”	-	F07
	232.9 mm	186.5 mm	227.2 mm	14 mm	F07
2-1/2	17.32”	8.25”	9.63”	-	F10
	439.9 mm	209.6 mm	244.6 mm	17 mm	F10
3	17.32”	8.61”	9.99”	-	F10
	439.9 mm	218.8 mm	253.8 mm	17 mm	F10
4	17.32”	8.48”	9.86”	-	F10
	439.9 mm	215.4 mm	250.4 mm	17 mm	F10

© 2023 DVCC • DSBVSE_1123

Ball Valve Stem Extension
Dimensions

The Right Connection®

BV3S-Series Ball Valve

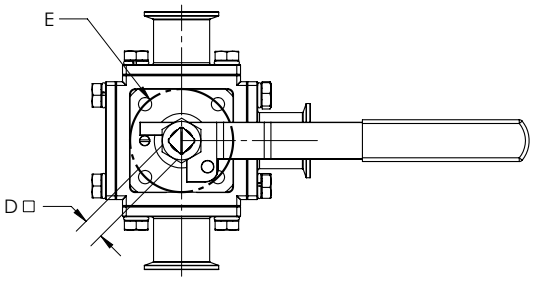

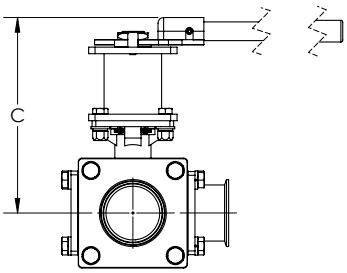

SIZES 2.5" - 4" ONLY
NTS

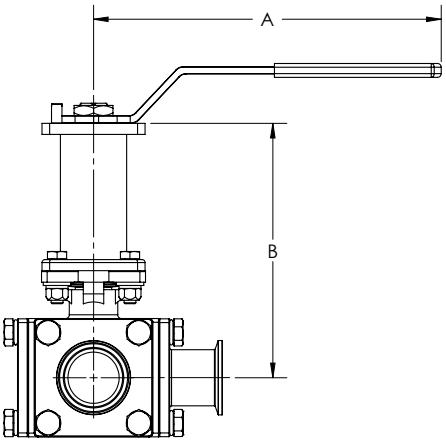

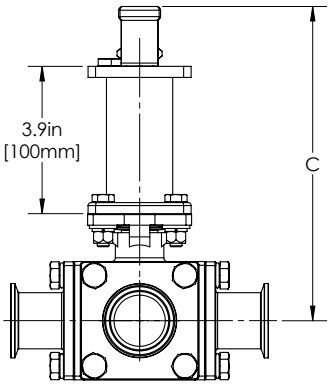

Size	A	B	C +/- .400”	D	E
1/2	4.9”	5.67”	7.20”	-	F04
	124.5 mm	143.9 mm	182.8 mm	9 mm	F04
3/4	4.9”	5.82”	7.36”	-	F04
	124.5 mm	147.9 mm	186.8 mm	9 mm	F04
1	5.4”	6.27”	7.70”	-	F05
	137.2 mm	159.1 mm	195.6 mm	11 mm	F05
1-1/2	9.3”	6.80”	8.40”	-	F07
	236.2 mm	172.7 mm	213.4 mm	14 mm	F07
2	9.3”	7.16”	8.76”	-	F07
	236.2 mm	181.9 mm	222.5 mm	14 mm	F07
2-1/2	18.0”	7.88”	9.26”	-	F10
	457.2 mm	200.2 mm	235.2 mm	17 mm	F10
3	18.3”	8.87”	10.25”	-	F10
	464.8 mm	225.3 mm	260.3 mm	22 mm	F10
4	18.3”	9.31”	10.89”	-	F12
	464.8 mm	236.4 mm	276.6 mm	22 mm	F12

© 2023 DVCC • DSBVSE_1123

Ball Valve Stem Extension
Bill of Materials

The Right Connection®

1/2” - 2” Size

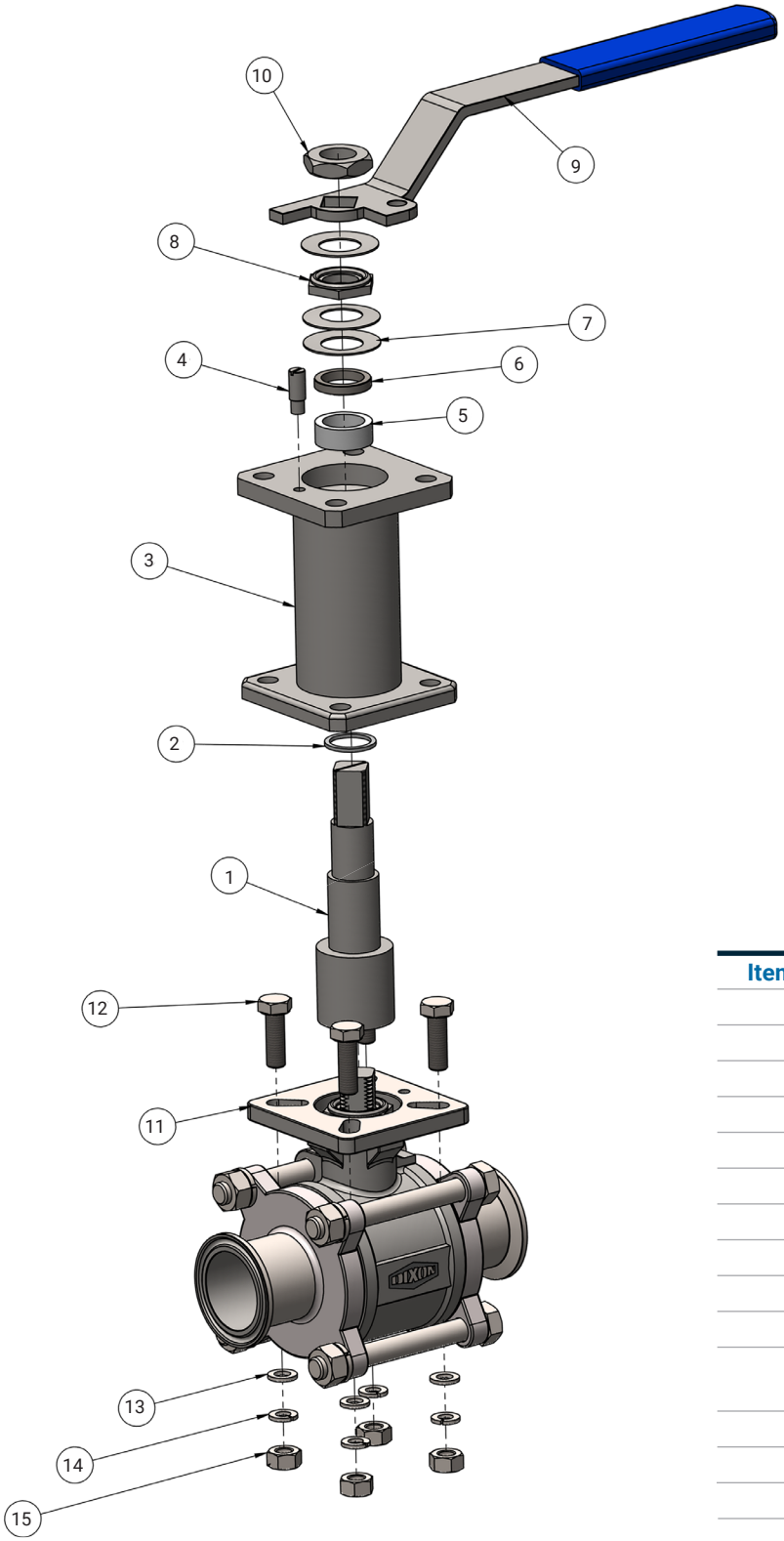

Item Number	Description	Quantity
1	stem extension	1
2	thrust washer	1
3	flange extension	1
4	stopper	1
5	stem packing	varies
6	gland ring	1
7	beveled washer	varies
8	locking nut	1
9	handle	1
10	stem nut	1
11	2-way sanitary ball valve	1
12	flange bolt	4
13	washer	4
14	spring lock washer	4
15	flange nut	4

© 2023 DVCC • DSBVSE_1123

Ball Valve Stem Extension
Bill of Materials

The Right Connection®

2-1/2" - 4" Size

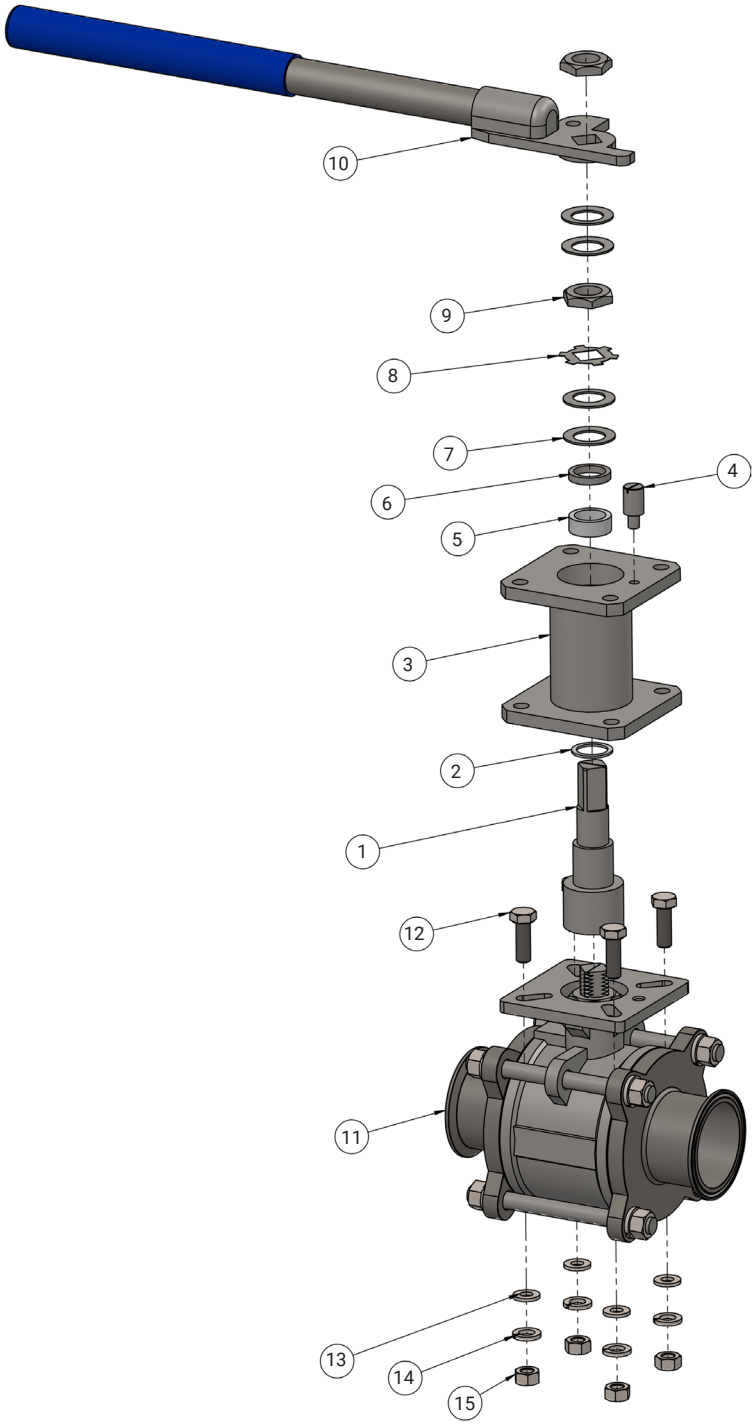

Item Number	Description	Quantity
1	stem extension	1
2	thrust washer	1
3	flange extension	1
4	stopper	1
5	stem packing	varies
6	gland ring	1
7	beveled washer	varies
8	locking tab	1
9	nut	2
10	handle assembly	1
11	2-way sanitary ball valve	1
12	flange bolt	4
13	washer	4
14	spring lock washer	4
15	flange nut	4

Dixon
N25 W23040 Paul Road, Pewaukee WI 53072
ph: 800.789.1718 • email: sanitarysales@dixonvalve.com
dixonvalve.com

© 2023 DVCC • DSBVSE_1123