Boss LPS
Low Pressure Systems

The Right Connection®

Abrasion Resistant Inserts for cam and groove Fittings.

Application
- Extends the life of adapters and couplers when transferring proppant to storage tanks

Size
- 4”

Features
- Abrasion resistance extends service life
- Available for multiple adapter materials including aluminum, brass, malleable iron, and stainless steel
- Available for multiple coupler materials including aluminum and malleable iron

Materials
- Insert: UHMW polyethylene
- Adapters: aluminum, brass, iron, and stainless steel
- Couplers: aluminum and malleable iron

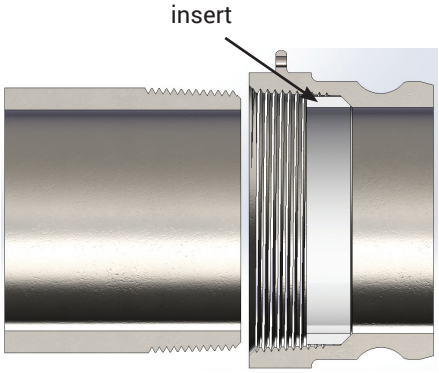

Part #	Description
400-A-ALINSERT	aluminum adapter x female NPT with UHMW insert
400-A-BRINSERT	brass adapter x female NPT with UHMW insert
400-A-MIINSERT	malleable iron adapter x female NPT with UHMW insert
400-A-SSINSERT	stainless steel adapter x female NPT with UHMW insert
400-C-ALINSERT	aluminum coupler x hose shank with UHMW insert
400-C-MIINSERT	malleable iron coupler x hose shank with UHMW insert

400-C-ALINSERT

400-A-ALINSERT

400-C-MIINSERT

Dixon

1 Dixon Square
Chestertown, MD 21620
ph: 877.963.4966
fx: 800.283.4966
dixonvalve.com

The Right Connection®

Two-Piece Hammer Union Nuts

Applications

- Replacement for damaged hammer union nuts
- Used with male one-piece flange adapters

Features

- Lug design provides enlarged surface area to hammer
- Repair nut is pinned and bolted for perfect alignment
- All split nuts have chamfer for welding
- Nut can be installed on pre-existing hammer union assembly
- 4" figure 200/206 nut is interchangeable with reliable brands
- 5" nut is interchangeable with reliable brands
- 6" and 8" figure 100/200/206 nuts are interchangeable with reliable brands
- Available in other series and sizes, contact Dixon

Material

- Forged steel meeting AISI standards

Specification

- **2,000 PSI** (138 BAR) cold working pressure

Dixon recommends using Loctite® Threadlocker Red 271™ when bolting together two-piece hammer union nuts to ensure that bolts do not loosen when in service. Option two is to weld the seams of the split nut. Bolt torque recommendation is 60 foot pounds.

Size	Part #	Description
4"	HU200400RN	split nut figure 200/206, blue (includes bolts)
5"	HUS500RN	suction hammer union split nut, black (includes bolts)
6"	HU100600RN	split nut figure 100, black (includes bolts)
	HU200600RN	split nut figure 200/206, blue (includes bolts)
8"	HU100800RN	split nut figure 100, black (includes bolts)
	HU200800RN	split nut figure 200/206, blue (includes bolts)

© 2022 DVCC • ARI_622